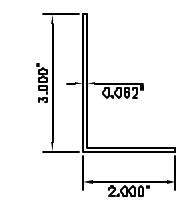

P.N.309
CAP ANGLE

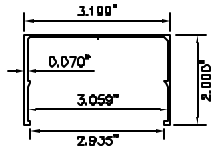

P.N.308
CAP CHANNEL

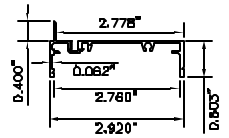

P.N.304
HORIZONTAL WINDOW CHANNEL

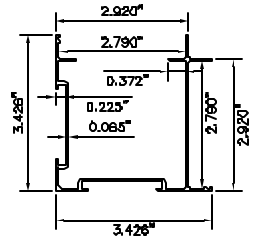

P.N.305
CORNER POST

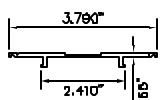

P.N.301
CONNECTING POST COVER

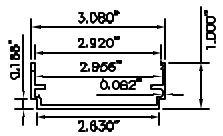

P.N.307
BASE CHANNEL

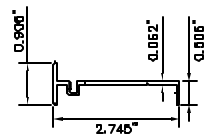

P.N.303
VERTICAL WINDOW CHANNEL

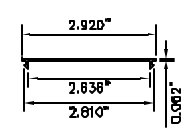

P.N.311
SNAP-ON COVER

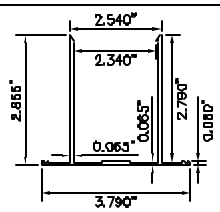

P.N.302
CONNECTING POST

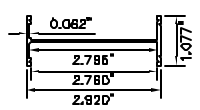

P.N.314
UNIVERSAL CHANNEL

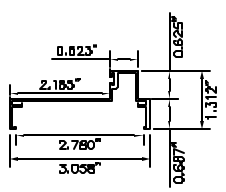

P.N.306
DOOR JAMB

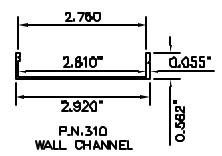

P.N.310
WALL CHANNEL

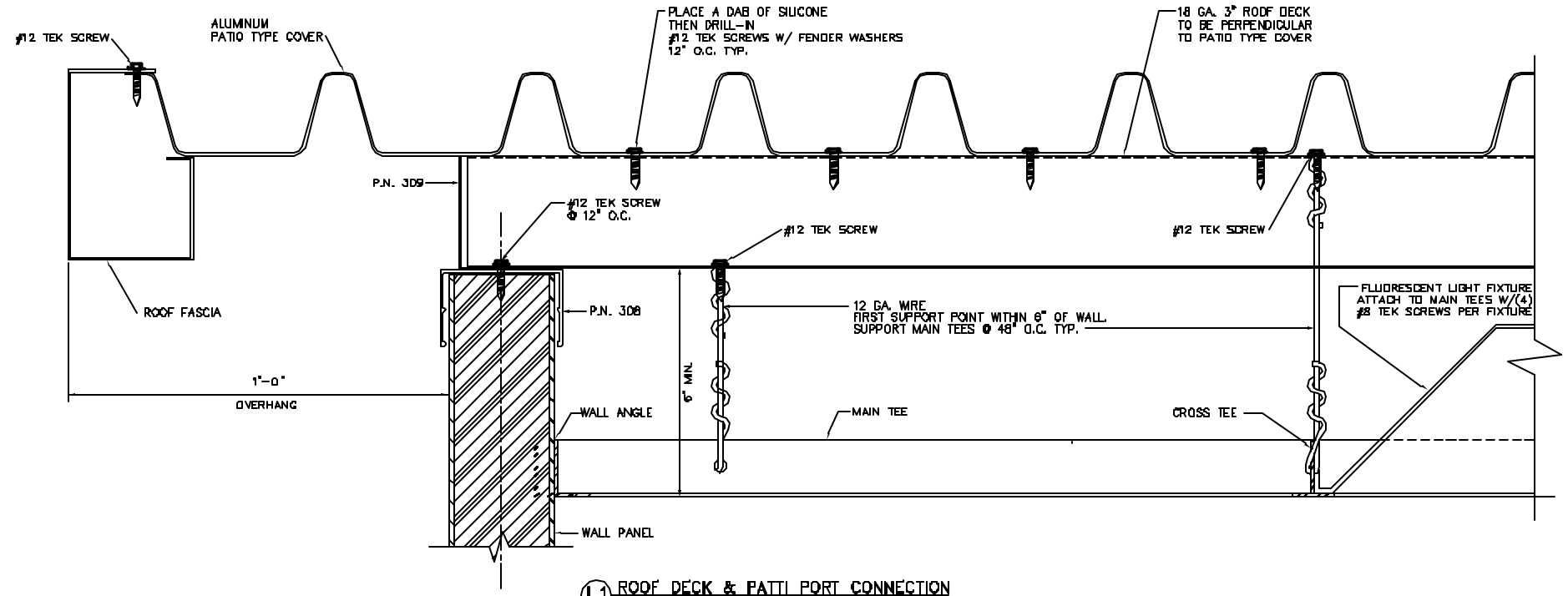

L1 ROOF DECK & PATTI PORT CONNECTION

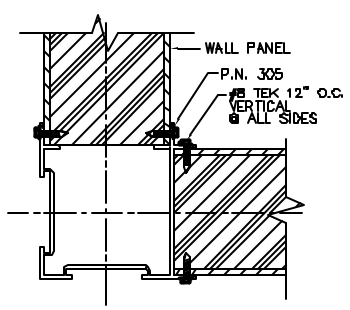

A CORNER POST

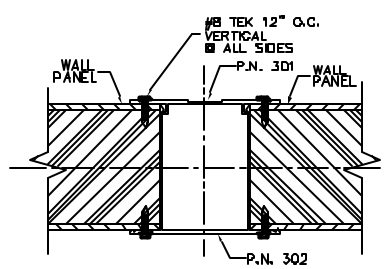

B CONNECTING POST

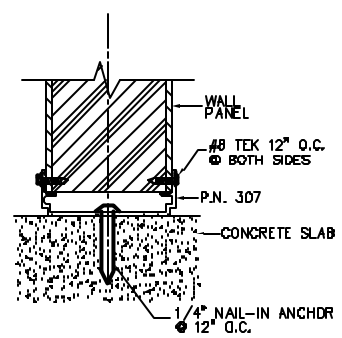

C BASE CHANNEL @ SLAB

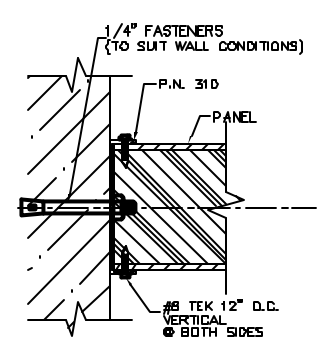

D WALL START

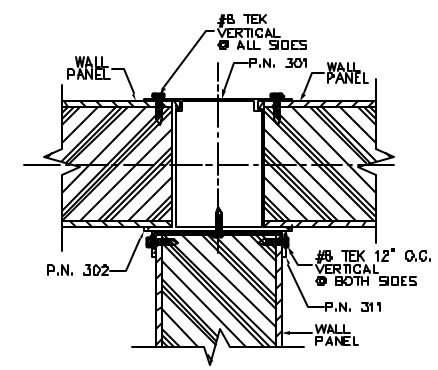

E 3-WAY WALL START

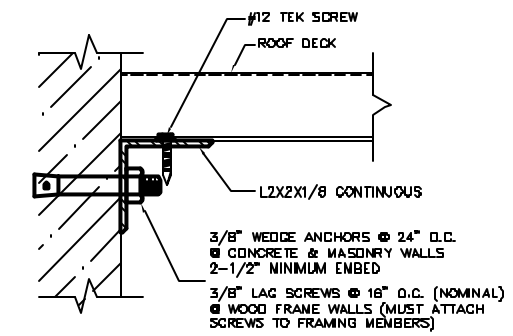

J2 ROOF DECK @ WALL

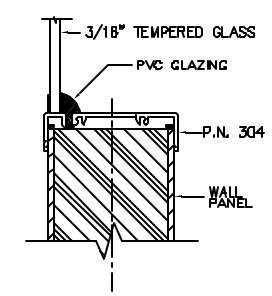

F HORIZONTAL WINDOW FRAME

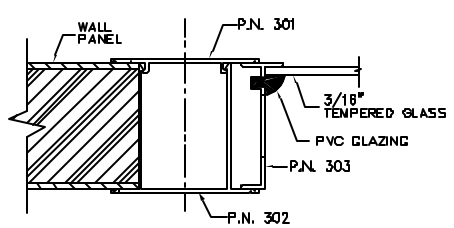

G VERTICAL WINDOW FRAME

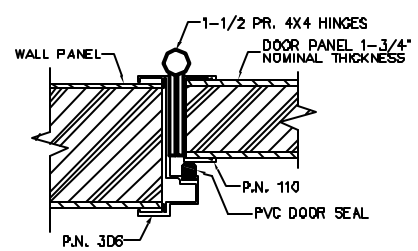

H HINGED DOOR JAMB

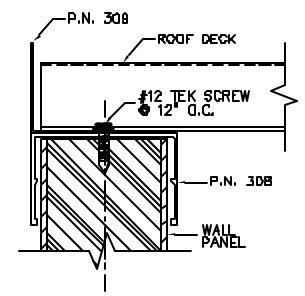

J1 ROOF DECK

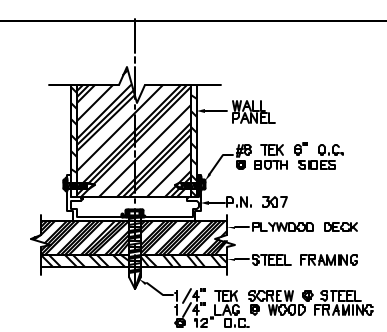

C1 BASE CHANNEL @ MEZZANINE

GENERAL NOTES:

1. ALUMINUM EXTRUSIONS 6063-T5 CLEAR.
2. PANEL CONSTRUCTION 1/8" VINYL CLAD HARDBOARD EACH SIDE LAMINATED TO 2-1/2" STYROFOAM CORE. ALUMINUM SKIN OPTIONAL.
3. ALL GLASS 3/16" TEMPERED.
4. SUSPENDED T-BAR CEILING, COMPLIES W/ UBC SEC. 23.07, TABLE 23J.
5. 18 GA. FORMED STEEL 3" ROOF DECK. CONNECT TO WALLS W/ TEK SCREWS, ICBO NO. 3056 OR APPROVED EQUAL.
6. ALL WEDGE ANCHORS ITT PHILLIPS RED HEAD, ICBO NO. 1372, OR APPROVED EQUAL.
7. NAIL-IN ANCHORS TO BE RAWL 2820 OR APPROVED EQUAL.
8. SILICONE CAULKING IS REQUIRED ON ALL EXTERIOR JOINTS.

CALIFORNIA WIRE PRODUCTS CORP.
1129 WEST BRADFORD CIRCLE
CORONA, CA. 92882
PHONE# (909)-371-7730 FAX# (909)-735-1070

BLDG.	REF. DWGS.	PHASE	OF	TITLE	GUARDSHACK
AREA		PART	OF		3" MODULAR GUARDSHACK
FLOOR		APPROVALS			
ROOM				CUSTOMER	
				ARCHITECT	

PRODUCT TYPE	GUARDSHACK	SERIES	3" MODULAR GUARDSHACK
WIRE GAUGE	N/A	FRAME	N/A
MESH SIZE	N/A	FINISH	WHITE VINYL INTERIOR W/
PATTERN	N/A		WHITE ALUMINUM CLAD EXTERIOR

DRAWN BY	LS	DATE 9/19/02	ITEM REVISION
DATE	1/01	DATE	
SCALE	NOT TO SCALE	DATE	
FILE NAME	J:\MONARCH\NEW_JOBS\	SHT. D1 OF	JOB NO.